CAVIUM

Simply Perfect Video™

Tiga-mini-Universal Wireless Display Adapter Reference Design

Product Brief

OVERVIEW

Cavium's Tiga-mini reference design is an ultra low-power small form-factor wireless display and media streaming TV adapter, optimized as a receiver accessory for smartphones and tablets. Its small size (smaller than a credit card) and light weight make it suitable as a portable consumer accessory. With support for a wide range of wireless display and media streaming standards, including Cavium's WiVu, WiFi Alliance's wireless display specification, and DLNA, Tiga-mini is an ideal universal wireless adapter for viewing both user generated and premium content on high definition displays. In addition to a stand-alone adapter, the Tiga-mini design can serve as a reference for integrated module inside wireless monitors and portable displays.

Based on the innovative CNW6611L media SoC from Cavium, the Tiga-mini adapter reference design offers support for full 1080p high definition content. The reference platform is designed to simply expose only what is necessary for an enjoyable consumer viewing experience, without unnecessarily increasing the size of the device or increasing the overall system cost. As such, the only interfaces available on this small form-factor design are the HDMI output and the mini-USB interface (used primarily to power the devices). The low power consumption of this reference design eliminates the need for an external power adapter, further reducing the overall solution cost. A simple status LED provides feedback to the user regarding the operation of the device.

Wi-Fi CERTIFIED Miracast™

APPLICATIONS

- Wireless display TV adapter
- Home media streaming receiver
- Wireless monitors and TV module

KEY FEATURES

- Multi-format audio and video decode
- Support for WiVu, WFD and DLNA
- HDMI 1.3 output
- Up to 1080p display capability
- Support for HDCP 2.x and DTCP-IP
- USB powered

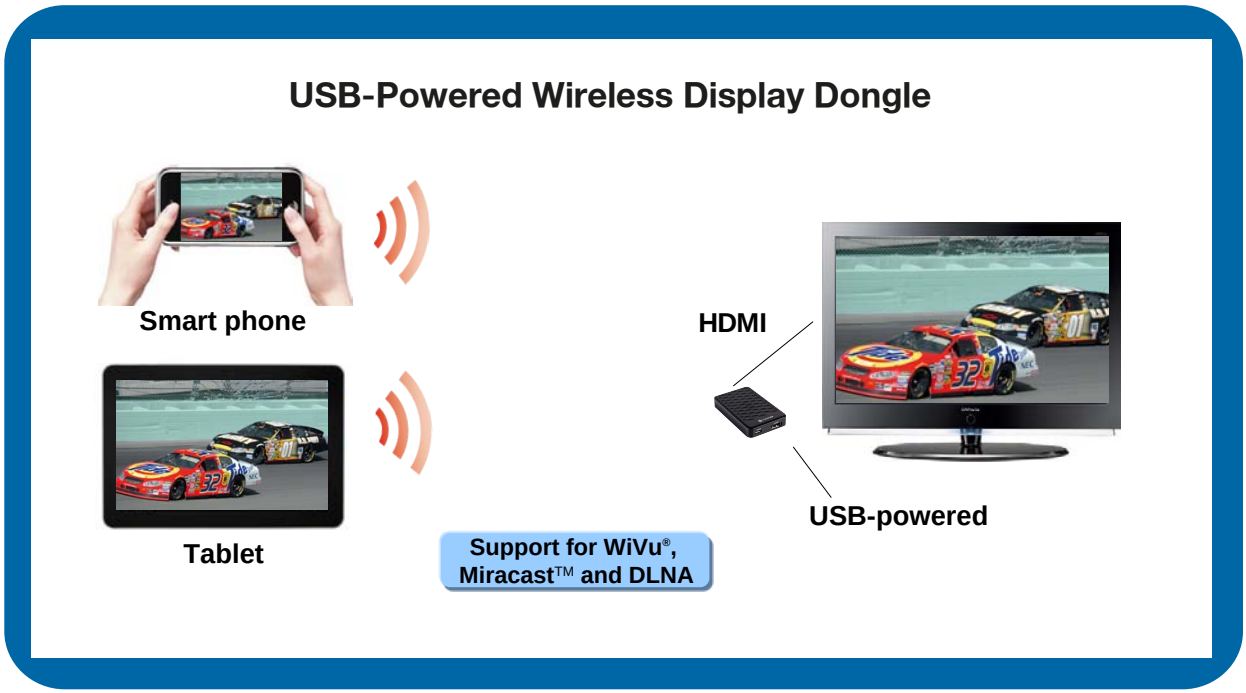

CAVIUM
2315 N. First Street
San Jose, CA 95131
T 408-943-7100
F 408-577-1992
E sales@cavium.com
www.cavium.com

Simply Perfect Video™

Tiga-mini-Universal Wireless Display Adapter Reference Design

Product Brief

Tiga-mini - Block Diagram

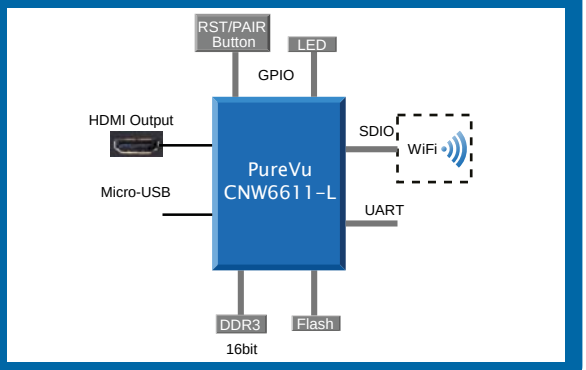

FEATURES

Video Processor
- Support MPEG-2 high definition main profile, up to HD MP@HL, decode
- Support H.264 high , main and base profile ,up to HD HP@L4.1, decode
- Support VC-1 SP/MP/AP profile at 1080p@30fps, decode
- Support AVS high definition jizhun profile, up to HD JIZHUN@6.2, decode
- Support MPEG4 SP & ASP, H.263 & Sorenson Spark, DivX Home Theater Profile, Real Video 8/9/10 at 1080p@30fps, decode
- Max resolution: 1080p30 or 1080i60

Audio Processor
- Programmable audio DSP with advanced DMA
- Decodes MP1/2/3, AC3, AAC-LC, HE-AAC audio streams

Security
- HDCP 2.x
- DTCP-IP

Video & Audio I/Os
- HDMI 1.3 output

WLAN
- IEEE 802.11n WiFi (SDIO Module)

Other I/Os
- USB for Power only

Power Requirements
- < 2.5W USB powered

2D Graphic Engine
- Supported Color formats: ARGB8888, RGB565, ARGB4444, ARGB 1555, CLUT8 and CLUT4
- Color keying
- Alpha Blending
- Raster Operation (ROP) and/or blending at the outputs
- Anti-flicker (Vertical 2-Tap FIR Filter)

Tiga-mini - Product Family

Part Number	Description
CNW6611L-EVK-TGM	Tiga-mini universal wireless display adapter reference design

CAVIUM
2315 N. First Street
San Jose, CA 95131
T 408-943-7100
F 408-577-1992
E sales@cavium.com
www.cavium.com

2012 Cavium, Inc. All Rights reserved. SLL Technology and PureVu are registered trademarks of Cavium, Inc.
All other brands and product names are registered trademarks of their respective owners.

Tiga-mini-PB-0.1 Printed in the USA